oceandell

TECHNICAL FACT SHEET

PRODUCT OVERVIEW

SHA-0002

Round Rain Shower Head · Showers

SHOWER DIAMETER **200 mm**	OUTLET DIAMETER **Ø30 mm**
CONNECTION DIAMETER **Ø23 mm**	SPRAY NOZZLES **120 × Ø1 mm**
INSTALLATION **Wall-mounted**	MATERIAL **Stainless steel**

PRODUCT SPECS 01

- Round rain shower head with a clean contemporary profile
- Slim circular body for a refined architectural appearance
- Evenly distributed spray nozzles across the shower face
- Stainless steel construction
- Central connection for a neat overhead installation
- Minimal exposed detailing for a premium visual finish
- Soft circular geometry suited to modern bathroom interiors
- Designed to coordinate with wall-mounted shower arms and concealed controls

FINISH VARIANTS 02

Chrome	SHA-0002
Matte Black	SHA-0002
Gold	SHA-0002
Nickel	SHA-0002
Bronze	SHA-0002

PRODUCT DESCRIPTION

Compact round rain shower head designed for contemporary bathrooms requiring a refined overhead shower solution with clean proportions. Its slim circular body and evenly distributed spray pattern create a balanced, minimalist appearance while maintaining a broad rain-style shower experience. The stainless steel construction gives the product a durable and premium exposed finish, and the compact central connection keeps the installation visually neat when paired with a wall-mounted shower arm. The rounded form offers a softer alternative to square overhead showers and integrates naturally with curved mixers, concealed controls and contemporary bathroom accessories. Available in Chrome, Matte Black, Gold, Nickel and Bronze, the shower head is suitable for residential, hospitality and premium commercial environments where coordinated finishes and a clean architectural aesthetic are important.

DIMENSIONAL DRAWING

MM

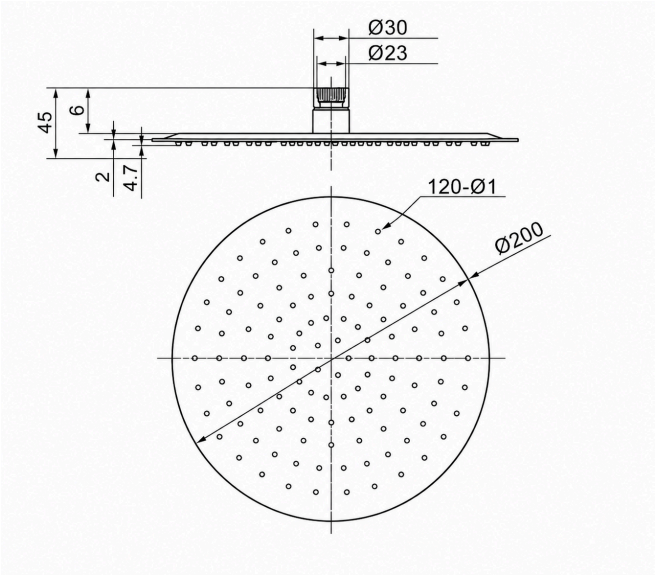

All dimensions are shown in millimetres unless otherwise stated. Site conditions, cut-out, trap system and mixer clearance should be verified before installation.

TECHNICAL DATA

03

Shower diameter	**200 mm**
Outlet diameter	**Ø30 mm**
Connection diameter	**Ø23 mm**
Spray nozzles	**120 × Ø1 mm**
Installation	**Wall-mounted**
Material	**Stainless steel**
Product type	**Rain Shower Head**
Description	**Rain Shower with Wall Fixing**
Installation type	**Wall Mounted**

CERTIFICATIONS & STANDARDS

04

ISO9001